KOMATSU®

PC210-10M0
PC210LC-10M0

PC210

HYDRAULIC EXCAVATOR

Photos may include optional equipment.

HORSEPOWER

Gross: 123 kW 165 HP/2000 min^{-1}
Net: 123 kW 165 HP/2000 min^{-1}

OPERATING WEIGHT

PC210-10M0: 20400 - 21100 kg
PC210LC-10M0: 21300 - 22300 kg

BUCKET CAPACITY

0.80 - 1.20 m^3

Gives You the Higher Returns, with Peace of Mind.

HORSEPOWER

Gross: 123 kW 165 HP/2000 min^{-1}
Net: 123 kW 165 HP/2000 min^{-1}

OPERATING WEIGHT

PC210-10M0: 20400 - 21100 kg
PC210LC-10M0: 21300 - 22300 kg

BUCKET CAPACITY

0.80 - 1.20 m^3

Higher Productivity

- Larger bucket capacity
- Higher stability
- Powerful digging operation and travel performance

Lower Fuel Consumption

- Reduction of fuel consumption by 20% (Compared to the PC200-8M0)
- Advanced management system of variable engine speed matching control
- Fan clutch system
- Reduction of hydraulic piping loss

Lower Maintenance Cost

- Less maintenance time with new features
- Detection system to prevent failure of main components
- More visible maintenance information on the monitor screen

Higher Durability

- Enhanced work equipment
- Heavy-duty main frame and rigidity swing circle

Safety & Comfort

- Large comfortable cab
- ROPS Cab *(ISO 12117-2)*
- Rear view monitor system *(Optional)*

Information & Communication Technology (ICT) & KOMTRAX

- Large multi-lingual high resolution Liquid Crystal Display (LCD) monitor
- Equipment Management Monitoring System
- KOMTRAX

HIGHER PRODUCTIVITY

Increase Productivity

Large capacity buckets

Bucket selection up to 1.20 m³ are available. It can be matched for various applications.

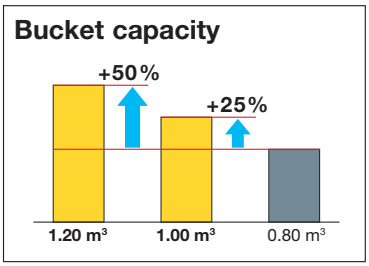

Bucket capacity

1.00 m³ & 1.20 m³

(Allowed material density: 1.8 t/m³) (Allowed material density: 1.5 t/m³)

1.00 m³ HD bucket & 1.20 m³ GP bucket

By optimizing the shape of the side edge, it increases the penetration force. And Me bucket shape increases the production and has an effect on fuel consumption and wear reduction.

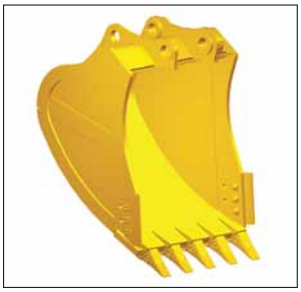

Excellent stability

Stability is greatly improved by increasing weight of counterweight and extending the rear end radius compared with the PC200-8M0. Lifting capacity also increased by 5%. This makes a smooth operation feeling, even being equipped with large capacity bucket or heavy attachment, possible to obtain. PC210–10M0 will increase your productivity more than ever.

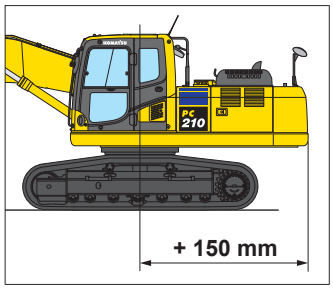

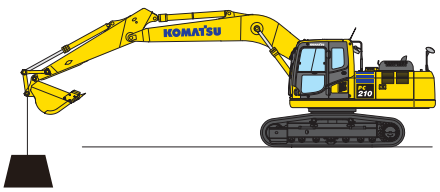

Lifting capacity Compared to the PC200-8M0

5% up

Powerful digging operation

Digging in P mode became powerful by improving hydraulic control. When more power is needed, the engine output is powered up by the one-touch power max. function (See next article), and you can dig stronger. Increasing engine power achieved high performance.

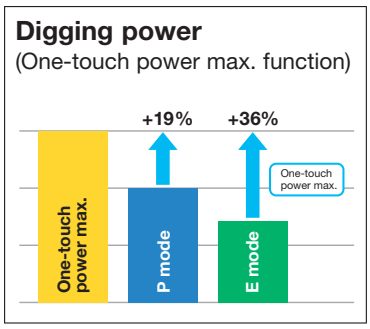

Engine power Compared to the PC200-8M0

12% up (123 kW ⬅ 110 kW)

One-touch power max. function

Digging force increase for 8.5 seconds of operation when press the left knob switch which is called the one-touch power max. switch and keep pressing. You can normally use E mode to reduce fuel consumption, use this function only when digging power is necessary, temporarily obtain it more than P mode.

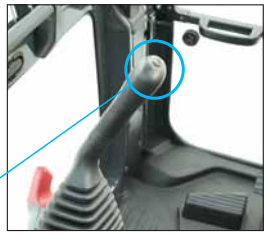

Powerful traveling performance

Increasing engine power makes the traveling in P mode powerful. When you are traveling on a high-load uphill or uneven terrain, PC210-10M0 gives you stable traveling speed and smooth traveling.

Traveling output power Compared to the PC200-8M0

15% up

LOWER FUEL CONSUMPTION

PC210/210LC-10M0

KOMATSU NEW ENGINE TECHNOLOGIES

Low Fuel Consumption Technology

Engine management is enhanced. The variable speed matching of the engine, hydraulic pump and a viscous fan clutch guarantee efficiency and precision. Through the in-house development and production of main components, Komatsu has achieved great advancements in technology, providing high levels of performance and efficiency in virtually all applications.

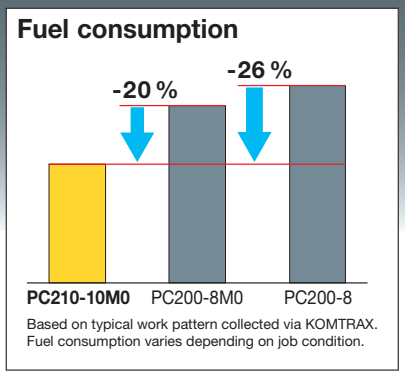

Fuel consumption

20% better
(Compared to the PC200-8M0)

26% better
(Compared to the PC200-8)

Komatsu SAA6D107E-1 engine
EU Stage 3A equivalent
(CG image)

Improvement of engine combustion efficiency

By optimizing the fuel injection control, the engine combustion efficiency is improved. This technology achieved both high power output and low fuel consumption.

Reduction of hydraulic pressure loss

The internal shape of the control valves, piping diameter and fitting shape have been thoroughly revised. With this improvement, hydraulic loss is reduced more than ever. It contributes to low fuel consumption.

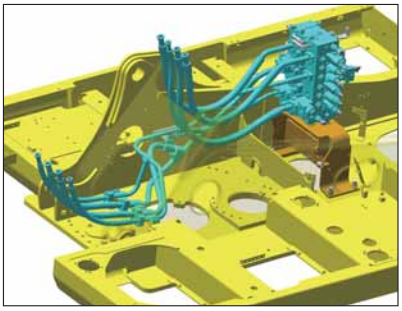

Reduced fan speed and fan drive loss

A speed controlled viscous fan clutch and large diameter fan improves engine efficiency and reduces engine power requirements when operating in cooler temperatures.

Enhanced engine-pump matching control

Large displacement hydraulic main pumps provide high flow output at low engine RPM. Furthermore, by building in optimum matching of the engine and pumps, it keeps high operability and workability. This technology achieved a large production and low fuel consumption.

Assists Energy-saving Operations

ECO gauge

Equipped with the ECO gauge that can be recognized at a glance on the right of the multi-function color monitor for environment-friendly energy-saving operations. Allows focus on operation in the green range with reduced CO_2 emissions and efficient fuel consumption.

ECO gauge Idling caution

Idling caution

To prevent unnecessary fuel consumption, an idling caution is displayed on the monitor, if the engine idles for 5 minutes or more.

Fuel Saving Support Functions

Just select a working mode that suits your purpose

In P mode, LARGE PRODUCTION is implemented. In E mode, LOW FUEL CONSUMPTION is implemented. E mode can be adjusted widely from E0 to E4 mode, and it adapts flexibly to customer's demands. Komatsu tuned each work mode precisely, ensuring high operability and workability. Just by selecting the work mode, it provides the best performance in demanding applications.

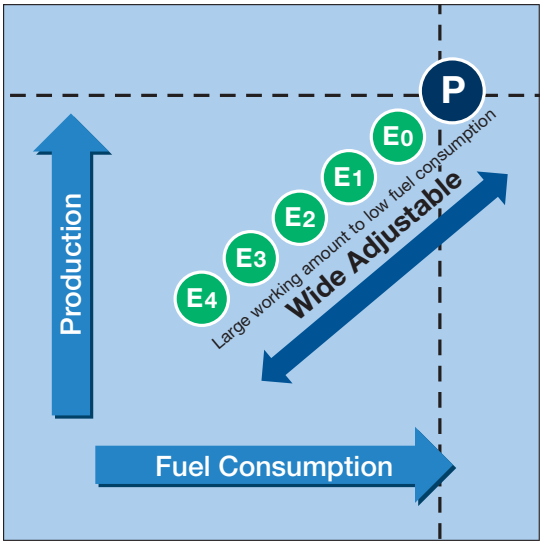

P (Power mode):

Maximum production
Fast cycle time

E (Economy mode):

Better fuel consumption

Easy selectable E mode

Compared with the conventional model, E0 to E4 can be easily selected on the monitor.

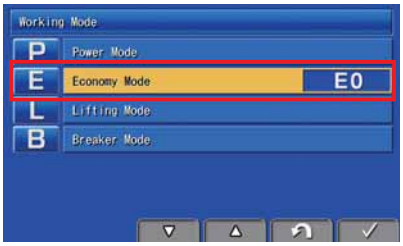

In addition to the above modes there are also the following modes. Please select the appropriate mode according to the application.

Working Mode	Application	Advantages
L	Lifting mode	• Suitable attachment speed • Lifting capacity is increased 7% by raising hydraulic pressure.
B	Breaker mode	• Optimum engine rpm, hydraulic flow
ATT/P	Attachment Power mode	• Optimum engine rpm, hydraulic flow, 2way • Power mode
ATT/E	Attachment Economy mode	• Optimum engine rpm, hydraulic flow, 2way • Economy mode

LOWER MAINTENANCE COST

Maintenance is Also Part of the Operating Cost. Komatsu Pursued Reduction of Maintenance Time and Cost.

Easy access to filters

Engine oil and fuel system filters are integrated into one side to allow easy maintenance and service.

Easy cleaning cooling unit

Cleanability of the cooling unit has been improved. It is effective in the field of forestry and agriculture.

- Easier cleaning of the core by making the automatic air conditioner (A/C) capacitor a hinge structure
- Dustproof net does not require tools for desorption
- Making oil cooler a single piece from 2 pieces, no more space accumulating dust

Easy oil sampling (Optional)

Easy oil sampling ports are added. It is important to get sample that is agitated properly. Using this equipment will help accurate analysis.

Minimization broken of circle grease nipple

The grease nipple of the circle is embedded for protection. It is irrefrangible structure even if wood debris or dusts are coiled around a swing circle.

Extended replacement interval of hydraulic oil filter

The replacement interval of the hydraulic oil filter element is extended by 2.5 times. It contributes to reduction of maintenance cost.

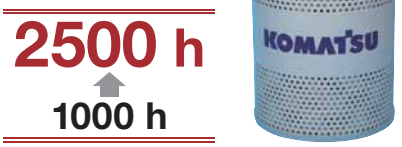

Easy maintenance time management

The monitor informs replacement time of oil and filters on the LCD when the replacement interval is reached.

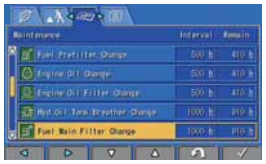

Easy to know maintenance time when using breaker

In addition to the above functions, it monitors the breaker usage time. Since the replacement time will be changed depending on the breaker usage time, monitor can notify the optimum replacement time.

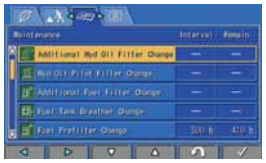

Detect abnormality of hydraulic circuit
Clogging sensor for hydraulic oil as standard

When the hydraulic oil filter is clogged, the caution message pops up on the monitor to notify replacing the filter. It is possible to suppress repair cost due to breakdown.

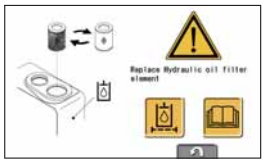

Clogging hydraulic oil filter caution

Clogging sensor for breaker line (Optional)

Pre-cleaner for dusty condition

Even in dusty places, by installing pre-cleaner coupled with the large air cleaner, the frequency of cleaning the air cleaner will be reduced. Durability has also improved by adopting new high efficiency pre-cleaner.

Battery disconnect switch

A battery disconnect switch allows a technician to disconnect the power supply and lock out before servicing or maintenance the machine. Also, minimize discharge of the battery during long-term non operation. System operating lamp tells the timing of disconnect the switch to prevent controller failures.

Fuel filtration

Prepared some filtration systems according to operating environment and region.

Other Features

Easy cleaning drain port of fuel tank

Improved drainability of hydraulic oil and fuel

Easy to check level of hydraulic oil

Electric priming pump (Optional)

Blow-by pressure detection

Fuel line contamination prevention

HIGHER DURABILITY

High Strength Work Equipment & Frames to Work with Large Bucket. It has Durability to Withstand Any Application.

Enhanced work equipment

Komatsu thoroughly investigated and analyzed the customer's job-site and built in working machines with sufficient durability in any application of operation. Designed by state-of-the-art strength analysis technology. Komatsu incorporated an original casting technology in the most loaded part. Durability is greatly improved by highly accurate controlled welding technology. It is a structure that endured the harsh test. Ultrasonic inspection ensures its quality.

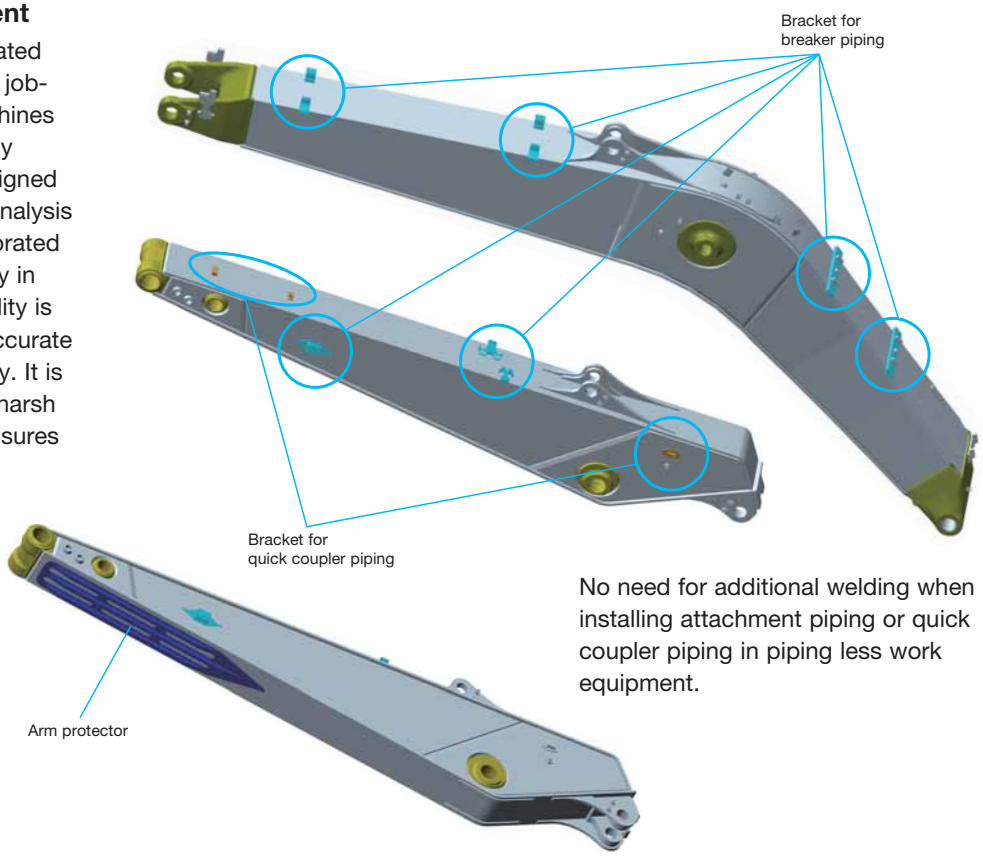

No need for additional welding when installing attachment piping or quick coupler piping in piping less work equipment.

Reinforced revolving frame

Main components are installed to revolving frame. Revolving frame is strengthened to withstand the various ways of severe tests. This tempered frame supports stable operation.

Strengthened swing circle

Swing circle with improved durability supports stable operation in any severe jobsite.

Reliable Komatsu components

All of the major components, such as engine, hydraulic pumps, hydraulic motors and control valves are exclusively designed and manufactured by Komatsu.

Highly reliable electronic devices

Exclusively designed electronic devices have passed severe testing.

- Controllers
- Sensors
- Connectors
- Heat resistant wiring

Sealed connector

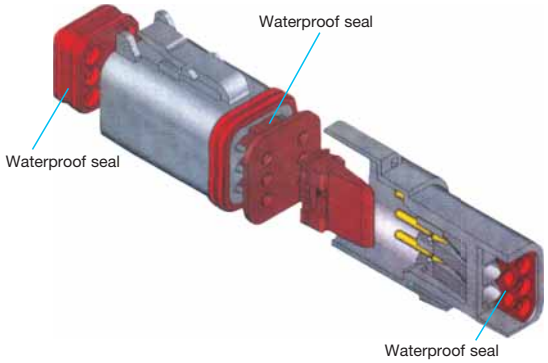

Steady frame structure

The revolving frame, center frame and undercarriage are designed by using the most advanced three-dimensional CAD and Finite Element Method (FEM*) analysis technology.

* FEM analysis is a stress simulation method using a computer.

LARGE HIGH RESOLUTION LCD MONITOR

Large Multi-lingual High Resolution LCD Monitor

A large user-friendly high resolution LCD color monitor enables safe, accurate and smooth work. Simple and easy to operate switches. Function keys facilitate multi-function operations. Displays data in 15 languages to globally support operators around the world.

Indicators

1. Auto-decelerator
2. Working mode
3. Travel speed
4. Engine water temperature gauge
5. Hydraulic oil temperature gauge
6. Fuel gauge
7. ECO gauge
8. Fuel consumption gauge
9. Function switches menu
10. Language select

Basic operation switches

1. Auto-decelerator
2. Working mode selector
3. Traveling selector
4. Buzzer cancel
5. Wiper
6. Window washer

Supports Efficient Operation

The main screen displays advices for promoting energy-saving operations as needed. The operator can use the ECO guidance menu to check the operation records, ECO guidance records, average fuel consumption logs, etc.

ECO guidance

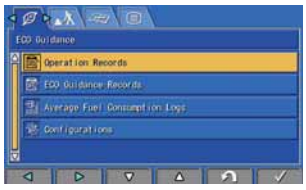

ECO guidance menu

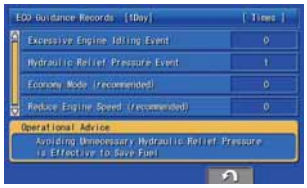

ECO guidance records

Operation records

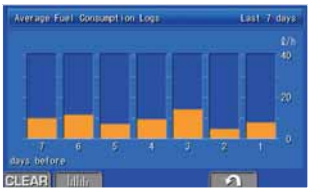

Average fuel consumption logs

Simplified Selection of Languages and New Languages added.

It supports 15 languages including newly added languages. Language selection has become extremely easy.

Equipment Management Monitoring System

Monitor function

Controller monitors engine oil level, coolant temperature, battery charge air clogging, etc. If the controller finds any abnormality, it is displayed on the LCD.

Maintenance function

The monitor informs replacement time of oil and filters on the LCD when the replacement interval is reached.

Trouble data memory function

Monitor stores abnormalities for effective troubleshooting.

KOMTRAX

The Komatsu remote monitoring and management technology provides insightful data about your equipment and fleet in user-friendly format.

Energy Saving Operation Report

KOMTRAX delivers the energy-saving operation report based on the operating information such as fuel consumption, load summary and idling time, which helps you efficiently run a business.

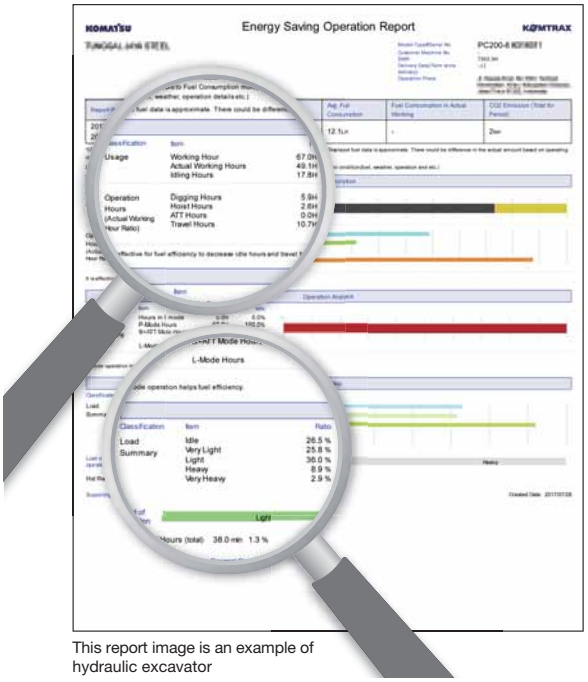

This report image is an example of hydraulic excavator

Equipment Management Support

Through the web application, a variety of search parameters are available to quickly find information about specific machines based on key factors. Moreover, KOMTRAX finds out machines with problems from your fleet and shows you through an optimal interface.

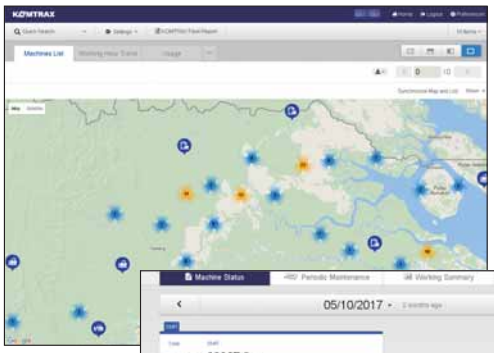

Location

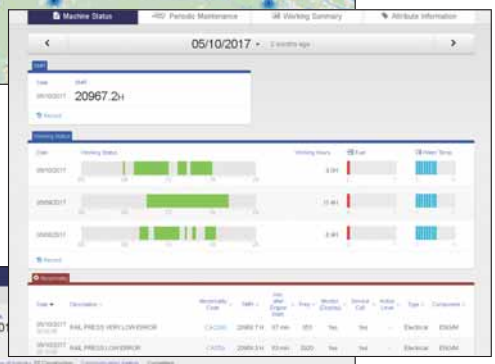

Working status

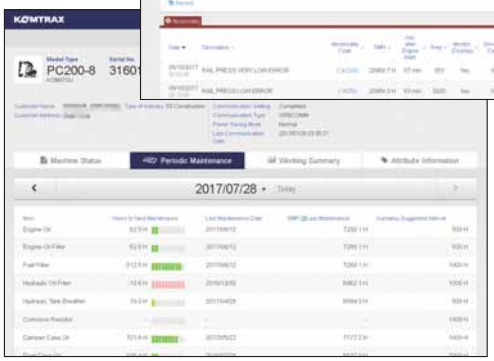

Periodic maintenance

The report contents and data depend on the machine model.

Optimal Strategy for Efficient Work

The detailed information that KOMTRAX puts at your fingertips helps you manage your fleet conveniently on the web anytime, anywhere. It gives you the power to make better daily and long-term strategic decisions.

SAFETY & COMFORT

Safety Should be the First Priority at the Jobsite

Complied with ROPS/OPG level 1

The machine is equipped with a ROPS cab that conforms to ISO 12117-2 for excavators as standard equipment. The ROPS cab has high shock-absorption performance, featuring excellent durability and impact strength. It also satisfies the requirements of OPG top guard level 1 (ISO 10262) for falling objects. Combined with the retractable seat belt, The ROPS cab protects the operator in case of tipping over and against falling objects.

Gas-assisted damper cylinders for opening engine food easily and lock bar

Gas-assisted damper cylinders helps opening the engine hood with light force. Lock bar is also equipped. This equipment will support during maintenance and repair.

Thermal guard, fan guard

Preventing direct contact to high temperature parts or the finger being caught by fan when checking around the engine, by installing thermal guards and fan guard.

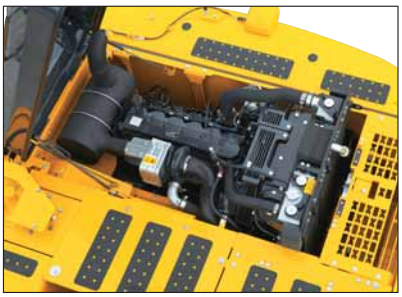

Rear view monitor system

(Optional)

A new rear view monitor system display has a rear view camera image that is continuously displayed together with the gauges and important vehicle information. This enables the operator to carry out work while easily checking the surrounding area. Even if it is on another screen, it changes to the rear camera image at the same time as the any operation lever is operated.

Slip-resistant plates

Highly durable slip-resistant plates to ensure long term superior traction.

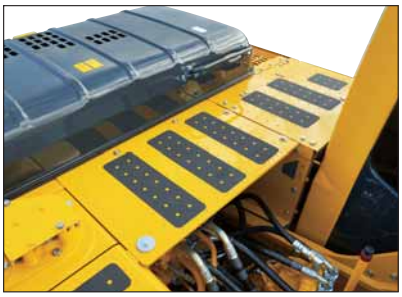

Cab guard:

Front full height guard level 1 (ISO 10262) (Optional)

OPG top guard level 2 (ISO 10262) (Optional)

Lock lever

Pump/Engine room partition

Large side view, rear and sidewise mirrors

Large handrail

Ensuring Operator's Comfort, It Contributes to Increased Safety and Productivity.

Suspension seat

Suspension seat with weight adjustment function as standard equipment.This seat can reduce fatigue even in operation for a long time.

Pressurized cab

Pressurizing inside the cab to minimize the dust entering from out side. It can keep cab clean.

Low cab noise

With overwhelming low noise, you can operate without stress. Ambient noise is also reduced, reducing the stress of surrounding workers.

Automatic A/C

It adjusts automatically to a comfortable temperature throughout the year, even in hot and cold areas.

Low vibration with cab damper mounting

The cab damper mounting combined with high rigidity deck aids vibration reduction at operator seat.

Sun roller blind (Optional)

Prepared a roller blind which blocks strong sunlight. Reduce sunlight at any time of day.

AUX

The location may change

12 V power supply

Magazine box

Cool & hot box

Luggage box

BUCKET

Feature of Komatsu Bucket

The bucket affects most of the digging work and fuel consumption. Komatsu has line-up of various buckets so that you can choose a bucket suitable for your jobsite condition. You can also choose a bucket made by HENSLEY as one of the options. Please contact your dealer.

Me Bucket

High Productivity by Low-resistant Excavation

The new Ideal bucket profile produces lower resistance at inside & outside bucket and production will be greatly increased.

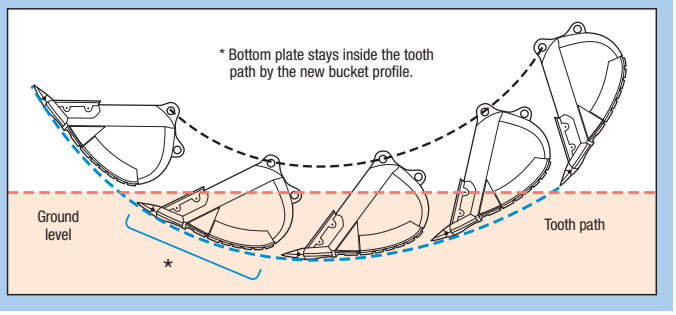

New Shape Bucket

Easy to Make Bucket Full and Good Penetration

The angle to the deepest part of the bucket becomes smooth with respect to the direction of excavation and the penetration resistance decreases by new shape of side edge.

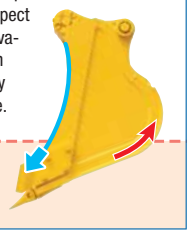

Category and Feature

Category	Load / Wear / Soil (Application)	Image
Light Duty LD	**Load** Machine power remains low during the majority of the work. No impact load. **Wear** Material is not abrasive. **Soil** Dirt, loam and clay.	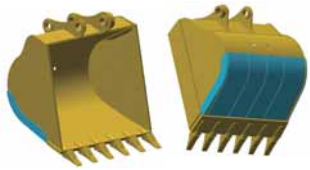
General Purpose GP	**Load** Machine power is mostly medium, but occasionally high. Bucket movements are smooth with minor shock load. Bucket penetrates easily. **Wear** Material is lightly abrasive. Some sand may be medium abrasive. **Soil** Mostly loose sand, gravel and finely broken materials.	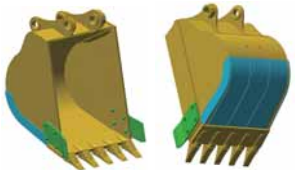
Heavy Duty HD	**Load** Machine power is high during majority of the work. Medium, but continuous shock load. **Wear** Material is abrasive. Light scratch marks can be seen at the bucket. **Soil** Limestone, shot rock, compact mix of sand, gravel and clay.	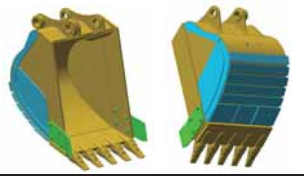
Extra Heavy Duty XHD	**Load** Machine power is high during most of the work, often at maximum. Dynamic shock loads are frequent and machine may shake. **Wear** Material is very abrasive. Large scratch marks are visible and, or deform metal. Works within heaps of rock with occasional un-shot rock and rock boulders. **Soil** Granite, basalt, quartz sand, compact and sticky clay.	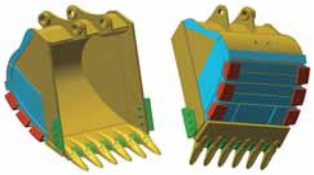

Bucket Line-up

Category	Shape	Capacity (m^3)	Width (mm)		Weight* (kg)	Tooth Quantity	Boom + Arm (m)						Tooth Type
			Without Side Shrouds, Side Cutters	With Side Shrouds, Side Cutters			Standard Undercarriage (600mm Shoes)			Long Undercarriage (700mm Shoes)			
							5.7+1.8	5.7+2.4	5.7+2.9	5.7+1.8	5.7+2.4	5.7+2.9	
GP	New Shaped	0.80	1080	1185	680	5	◎	◎	◎	◎	◎	◎	HP
	Me	0.80	1045	1170	765	5	◎	◎	◎	◎	◎	◎	HP/KMAX2
	Me	0.93	1200	1325	770	5	◎	◎	◎	◎	◎	◎	HP/KMAX2
	New Shaped	0.94	1220	1325	740	5	◎	◎	◎	◎	◎	◎	HP
	Me	1.05	1330	1500	935	6	◎	◎	×	◎	◎	×	HP/KMAX2
	Me	1.20	1200	1310	910	5	◎	□	□	◎	○	○	HP
HD	Me	1.00	1085	1190	880	5	◎	◎	○	◎	◎	◎	HP

* With side cutters ◎: Density up to 2.1 t/m^3 ○: Density up to 1.8 t/m^3 □: Density up to 1.5 t/m^3 ×: Not usable

SPECIAL SPEC.

Attachment Piping Specification

Equips PC210/210LC-10M0 for breaker and crusher installation. Hydraulic flow rate can be regulated by setting Breaker Mode on monitor panel during breaker operation.

Super Long Front

Super long front attachment boasts a huge digging reach. An excavator with this attachment highly improves working efficiency in various works such as river conservation, lake dredging, slope finishing and materials carrying where an extensively long reach is required.

Reinforced work equipment

Boom and arm are newly designed and enhanced longer life.

Main Specification

	PC210LC-10M0	
Reach	15 m	18 m
Bucket Capacity	0.45-0.55 m³	0.29-0.36 m³
Boom Length	8620 mm	10300 mm
Arm Length	8350 mm	8200 mm

Applicable bucket capacity

0.45-0.55 m³ & 0.29-0.36 m³

(15 m reach) (18 m reach)

Expanded applicable bucket capacity by improving machine stability.

ATTACHMENT

Komatsu Genuine Attachment Tool

Komatsu-recommended attachment tools for hydraulic excavators
A wide range of attachment tools are provided to suit customers' specific applications.

Hydraulic breaker

The hydraulic breaker is an attachment tool used for crushing rock beds and paved surfaces, demolishing concrete structures, etc. The large gas chamber, ideal gas pressure ratio, and long-stroke piston deliver a powerful impact force. Since the breaker unit does not require an accumulator, the number of parts has been reduced, resulting in lower maintenance costs.

Crusher

This attachment tool is used for demolishing concrete structures. Since it does not have a striking mechanism and features low noise and low vibration, it is suitable for work in urban areas. The open-close cylinder is equipped with a speed-up valve for increasing work speed.

Primary crusher

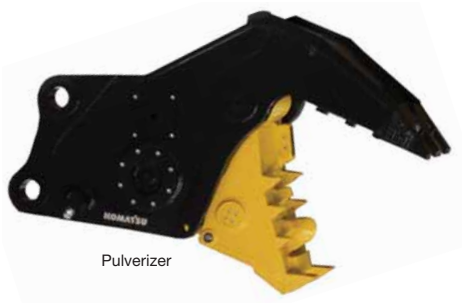

Pulverizer

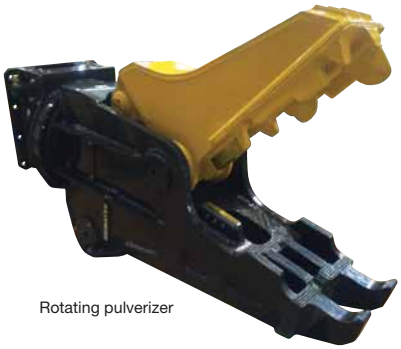

Rotating pulverizer

Applications of Attachment Tools

Application/ Attachment Tool	Civil Engineering	Quarry	Demolition	Industrial Waste Disposal	Iron-Making	Utility Construction	Rental
Hydraulic Breaker	○	○	○	○	○	○	○
Crusher (Primary Crusher)			○				○
Crusher (Pulverizer)			○	○			○

KMAX Tooth System

Komatsu is preparing the KMAX series in addition to traditional horizontal pin tooth system. Please select the tooth suitable for the handling material and construction method of the job site to be used.

KMAX Tooth Line-up

Feature	Style	KMAX	KMAX2
F **Flare:** Loose material for clean bottom and greater fill		○	
SYL **Standard:** General applications		○	
SD **Chisel:** General purpose tooth Designed for penetration		○	
RC **Rock Chisel:** Designed for penetration and long wear life		○	
T **Tiger:** Designed for good penetration with ribs for strength		○	
TV **Tiger:** Offers best penetration in tight material		○	
UT **Twin Tiger:** Offers longer life penetration for corners		○	
WT **Twin Tiger:** Designed for penetration for corners		○	
S **Standard**			○
SL **Long Life**			○
HS **Heavy Standard**			○

KMAX Series Pin Lock System

Fastener

Simple, reusable fastener system saves time and money by unlocking with a simple 90-degree turn.

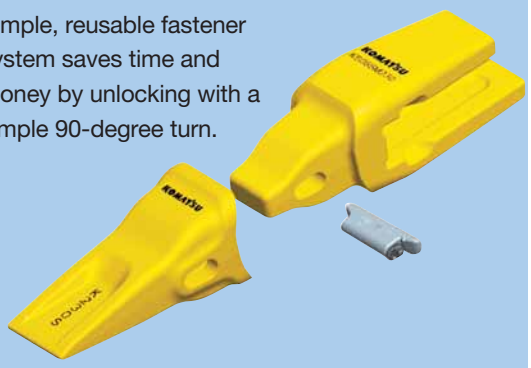

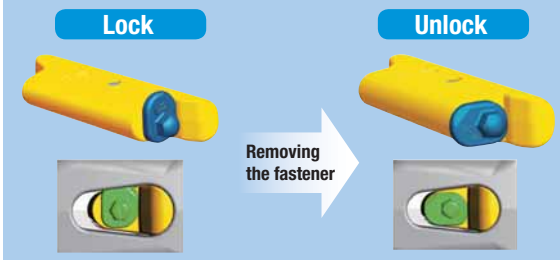

When removing the fastener, use the correct size socket to rotate the pin-locking shaft 90-degree counter-clockwise.

HENSLEY Brand Bucket

Diverse Bucket Line-up by Application, featuring KMAX system. Applicable bucket depends on the combination of work equipment, handling materials and job condition. For more details, please contact your DB.

Category and Recommended Applications

Category	Recommended Applications	Image
Trenching and Loading TL	Dirt, loam, sand, gravel, loose clay, abrasive soils with limited rock mixture.	
Heavy Duty Plate Lip Bucket with Wear Plate HP	Abrasive soils, compact or dense clay, loose rock and gravel.	
Heavy Duty Plate Lip Bucket with Wear Plate & Wear Strips HPS	Abrasive soils, compact or dense clay, loose rock and gravel.	
Extreme Duty Plate Lip Bucket with Special Features HPX	Shot rock, stratified materials, quarry or tough, highly abrasive applications.	

Bucket Line-up

Category	Capacity (m^3)	Width (mm)	Weight (kg)	Tooth Quantity
TL	0.67	762	689	4
	0.85	914	780	5
	1.03	1067	857	5
	1.20	1219	949	6
	1.38	1372	1026	6
HP	0.50	610	652	3
	0.67	762	763	4
	0.85	914	868	5
	1.03	1067	950	5
	1.20	1219	1066	6
	1.38	1372	1139	6
HPS	0.50	610	724	3
	0.67	762	840	4
	0.85	914	962	5
	1.03	1067	1061	5
	1.20	1219	1193	6
	1.38	1372	1283	6
HPX	0.50	610	824	3
	0.67	762	939	4
	0.85	914	1061	5
	1.03	1067	1161	5
	1.20	1219	1293	6
	1.38	1372	1383	6

KOMATSU TOTAL SUPPORT

Komatsu Total Support

Komatsu Distributer is ready to provide variety of support before and after procuring machine to keep customers machine available and minimize operation cost.

Fleet recommendation

Komatsu Distributor can study customer job site and provide the most optimum fleet recommendation with detailed information to meet all of your application needs when you are considering to buy new machines or to replace the existing ones from Komatsu.

Product support

Komatsu Distributor secure the quality of machine by offering quality repair and maintenance servises to the customer using Komatsu developed programs.

- Preventive Maintenance (PM) Clinic
- Komatsu Oil and Wear Analysis (KOWA)
- Undercarriage inspection service, etc.

Genuine parts and genuine oil

Komatsu Distributor will promptly and smoothly offer genuine parts and genuine oil guaranteed quality to various jobsites. Genuine oil is developed by Komatsu so that it is best matched for our Komatsu engines and hydraulic components. It maximizes engine and hydraulic components performance and prolong life.

Service contract

Komatsu Distributor offers several service package of repair and maintenance for a contracted period with optimum cost. Customer can be "worry-free" by trusting Komatsu Distributor skilled service.

Extended warranty

Extended warranty with several options available. Komatsu guarantee skilled repair with genuine parts and protection from unexpected expenses.

Operator training

Komatsu Distributor can provice excellent operator training which enables them to operate machine safely & efficiently and to maintain machine properly.

SPECIFICATION

ENGINE

Model . . . . . Komatsu SAA6D107E-1
Type. . . . . Water-cooled, 4-cycle, direct injection
Aspiration . . . . . Turbocharged, aftercooled
Number of cylinders 6
Bore. . . . . .107 mm
Stroke . . . . . .124 mm
Piston displacement . . . . . 6.69 L
Horsepower:
SAE J1995 . . . . . Gross 123 kW 165 HP
ISO 9249 / SAE J1349 . . . . . Net 123 kW 165 HP
Rated rpm. . . . . .2000 min^{-1}
Fan drive method for radiator cooling . . . . . Mechanical with viscous fan clutch
Governor . . . . . All-speed control, electronic

Net horsepower at the maximum speed of radiator cooling fan is 117.2 kW 157.2 HP.
EU Stage 3A emission equivalent.

HYDRAULICS

Type. . . . . HydrauMind (Hydraulic Mechanical Intelligence New Design) system, closed-center system with load sensing valves and pressure compensated valves
Number of selectable working modes 6
Main pump:
Type . . . . . Variable displacement piston type
Pumps for. . . . . .Boom, arm, bucket, swing, and travel circuits
Maximum flow . . . . . 475 L/min
Supply for control circuit . . . . . Self-reducing valve
Hydraulic motors:
Travel . . . . . 2 x axial piston motor with parking brake
Swing . . . . . 1 x axial piston motor with swing holding brake
Relief valve setting:
Implement circuits . . . . . .37.3 MPa 380 kg/cm^2
Travel circuit. . . . . .37.3 MPa 380 kg/cm^2
Swing circuit. . . . . .28.9 MPa 295 kg/cm^2
Pilot circuit . . . . . .3.2 MPa 33 kg/cm^2
Hydraulic cylinders:
(Number of cylinders – bore x stroke x rod diameter)
Boom . . . . . 2–120 mm x 1334 mm x 85 mm
Arm. . . . . 1–135 mm x 1490 mm x 95 mm
Bucket for 2.93 m arm. . . . . 1–115 mm x 1120 mm x 80 mm
for 2.41 m arm. . . . . 1–115 mm x 1120 mm x 80 mm
for 1.84 m arm. . . . . 1–125 mm x 1110 mm x 85 mm

DRIVES AND BRAKES

Steering control. . . . . .Two levers with pedals
Drive method. . . . . Hydrostatic
Maximum drawbar pull . . . . . 178 kN 18200 kg
Gradeability. . . . . .70%, 35°
Maximum travel speed: High . . . . . 5.5 km/h
(Auto-shift) Mid . . . . . 4.1 km/h
(Auto-shift) Low. . . . . 3.0 km/h
Service brake . . . . . .Hydraulic lock
Parking brake . . . . . Mechanical disc brake

SWING SYSTEM

Drive method. . . . . Hydrostatic
Swing reduction . . . . . .Planetary gear
Swing circle lubrication. . . . . Grease-bathed
Service brake . . . . . .Hydraulic lock
Holding brake/Swing lock. . . . . Mechanical disc brake
Swing speed . . . . . 12.4 min^{-1}

UNDERCARRIAGE

Center frame . . . . . X-frame
Track frame. . . . . .Box-section
Seal of track . . . . . Sealed track
Track adjuster . . . . . .Hydraulic
Number of shoes (Each side):
PC210-10M0 45
PC210LC-10M0 49
Number of carrier rollers. . . . . 2 each side
Number of track rollers (Each side):
PC210-10M0 7
PC210LC-10M0 9

COOLANT AND LUBRICANT CAPACITY (REFILLING)

Fuel tank . . . . . .400 L
Coolant . . . . . 21.8 L
Engine . . . . . 23.1 L
Final drive (Each side). . . . . 3.3 L
Swing drive . . . . . 5.3 L
Hydraulic tank. . . . . .135 L

OPERATING WEIGHT (APPROXIMATE)

Operating weight including 5700 mm one-piece boom, 2925 mm arm, SAE J 296 heaped 1.00 m^3 HD backhoe bucket, rated capacity of lubricants, coolant, full fuel tank, operator, and standard equipment.

Shoes	PC210-10M0		PC210LC-10M0	
	Operating Weight	Ground Pressure	Operating Weight	Ground Pressure
500 mm	20400 kg	55.8 kPa 0.57 kg/cm^2	—	—
600 mm	20500 kg	46.8 kPa 0.48 kg/cm^2	21300 kg	44.0 kPa 0.45 kg/cm^2
700 mm	20900 kg	40.8 kPa 0.42 kg/cm^2	21700 kg	38.4 kPa 0.39 kg/cm^2
800 mm	21100 kg	36.1 kPa 0.37 kg/cm^2	22000 kg	34.0 kPa 0.35 kg/cm^2
900 mm	—	—	22300 kg	30.7 kPa 0.31 kg/cm^2

DIMENSIONS

Arm Length		1840 mm	2410 mm	2925 mm
A	Overall length	9630 mm	9640 mm	9550 mm
B	Length on ground (Transport): PC210-10M0 PC210LC-10M0	6255 mm 6455 mm	5690 mm 5880 mm	4825 mm 5015 mm
C	Overall height (To top of boom)	2975 mm	3215 mm	3005 mm

Model		PC210-10M0	PC210LC-10M0
D	Overall width	2800 mm	3080 mm
E	Overall height (To top of cab)	3045 mm	3045 mm
F	Ground clearance, counterweight	1085 mm	1085 mm
G	Ground clearance (Minimum)	440 mm	440 mm
H	Tail swing radius	2900 mm	2900 mm
I	Track length on ground	3275 mm	3655 mm
J	Track length	4070 mm	4450 mm
K	Track gauge	2200 mm	2380 mm
L	Width of crawler	2800 mm	3080 mm
M	Shoe width	600 mm	700 mm
N	Grouser height	26 mm	26 mm
O	Machine cab height	2095 mm	2095 mm
P	Machine cab width	2710 mm	2710 mm
Q	Distance, swing center to rear end	2860 mm	2860 mm

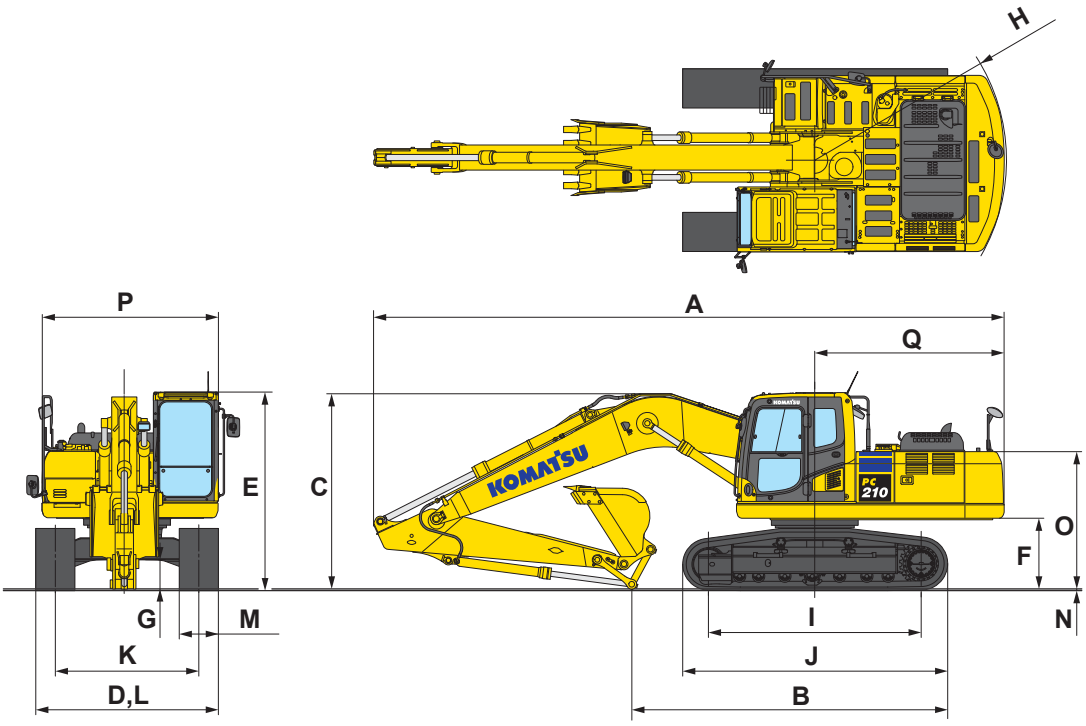

PC210/210LC-10M0

WORKING RANGE

Arm Length		1840 mm	2410 mm	2925 mm
A	Max. digging height	9665 mm	9810 mm	10065 mm
B	Max. dumping height	6760 mm	6885 mm	7160 mm
C	Max. digging depth	5230 mm	6000 mm	6515 mm
D	Max. vertical wall digging depth	4530 mm	5410 mm	5810 mm
E	Max. digging reach	8870 mm	9390 mm	9860 mm
F	Max. digging reach at ground level	8670 mm	9200 mm	9680 mm
G	Min. swing radius	2820 mm	3090 mm	2990 mm
SAE J 1179 Rating	Bucket digging force at power max.	157 kN 16000 kg	138 kN 14100 kg	138 kN 14100 kg
	Arm crowd force at power max.	139 kN 14200 kg	124 kN 12600 kg	101 kN 10300 kg
ISO 6015 Rating	Bucket digging force at power max.	177 kN 18000 kg	149 kN 15200 kg	149 kN 15200 kg
	Arm crowd force at power max.	145 kN 14800 kg	127 kN 13000 kg	108 kN 11000 kg

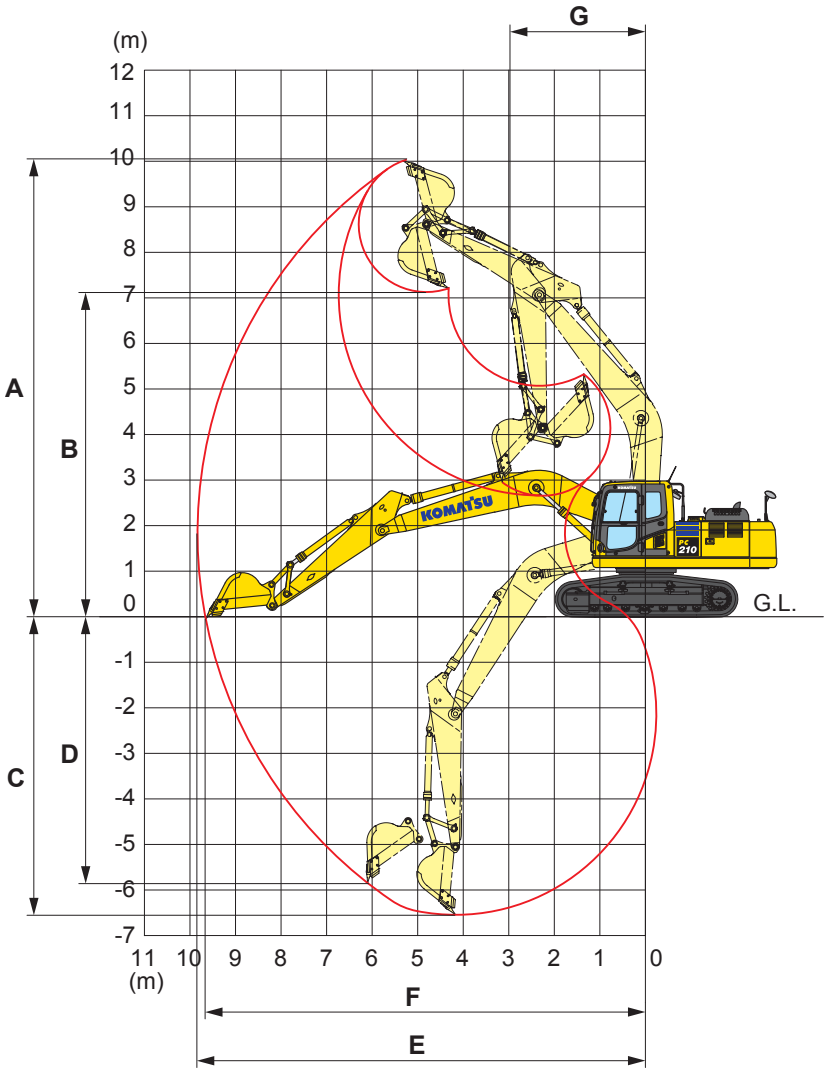

LIFTING CAPACITY WITH LIFTING MODE

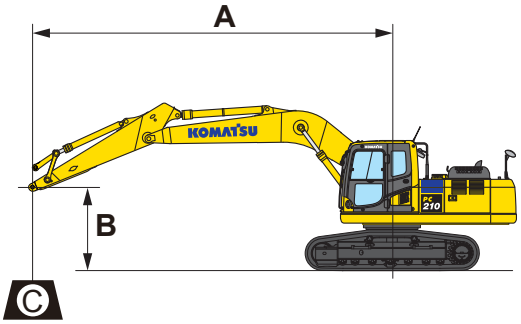

A: Reach from swing center
B: Arm top pin height
C: Lifting capacity
Cf: Rating over front
Cs: Rating over side
⊛: Rating at maximum reach

Conditions:
- 5700 mm one-piece boom
- Shoe width:
  —PC210-10M0 600 mm triple grouser

PC210-10M0 Arm: 2925 mm Without bucket Shoe: 600 mm triple grouser

B \ A	MAX	⊛ MAX		7.5 m		6.0 m		4.5 m		3.0 m		1.5 m	
		Cf	Cs	Cf	Cs	Cf	Cs	Cf	Cs	Cf	Cs	Cf	Cs
7.5 m	6.15 m	*3850 kg	*3850 kg			*4450 kg	*4450 kg						
6.0 m	7.26 m	*3600 kg	3250 kg			*5150 kg	4550 kg						
4.5 m	7.93 m	*3550 kg	2750 kg	4500 kg	3050 kg	*5750 kg	4400 kg	*6500 kg	*6500 kg				
3.0 m	8.29 m	*3700 kg	2500 kg	4350 kg	2950 kg	6200 kg	4150 kg	*8450 kg	6300 kg				
1.5 m	8.36 m	3600 kg	2400 kg	4250 kg	2800 kg	5900 kg	3900 kg	9200 kg	5800 kg				
0 m	8.15 m	3700 kg	2400 kg	4150 kg	2700 kg	5750 kg	3700 kg	8900 kg	5550 kg	*7000 kg	*7000 kg		
–1.5 m	7.65 m	4000 kg	2650 kg	4100 kg	2700 kg	5650 kg	3650 kg	8800 kg	5450 kg	*11450 kg	10350 kg	*7250 kg	*7250 kg
–3.0 m	6.78 m	4800 kg	3150 kg			5700 kg	3650 kg	8850 kg	5500 kg	*15200 kg	10550 kg	*11900 kg	*11900 kg
–4.5 m	5.37 m	6950 kg	4500 kg					*8700 kg	5750 kg	*12200 kg	10950 kg		

PC210-10M0 Arm: 2410 mm Without bucket Shoe: 600 mm triple grouser

B \ A	MAX	⊛ MAX		7.5 m		6.0 m		4.5 m		3.0 m		1.5 m	
		Cf	Cs	Cf	Cs	Cf	Cs	Cf	Cs	Cf	Cs	Cf	Cs
7.5 m	5.49 m	*5900 kg	5250 kg										
6.0 m	6.71 m	5500 kg	3750 kg			*5800 kg	4550 kg	*6050 kg	*6050 kg				
4.5 m	7.44 m	4600 kg	3100 kg			*6300 kg	4400 kg	*7400 kg	6800 kg	*10200 kg	*10200 kg		
3.0 m	7.81 m	4150 kg	2800 kg	4450 kg	3000 kg	6250 kg	4200 kg	*9300 kg	6300 kg				
1.5 m	7.88 m	4000 kg	2700 kg	4350 kg	2900 kg	6000 kg	3950 kg	9250 kg	5850 kg				
0 m	7.67 m	4150 kg	2750 kg	4250 kg	2850 kg	5850 kg	3850 kg	9050 kg	5650 kg				
–1.5 m	7.13 m	4550 kg	3050 kg			5800 kg	3800 kg	9000 kg	5650 kg	*12200 kg	10750 kg		
–3.0 m	6.19 m	5650 kg	3700 kg			5900 kg	3850 kg	9100 kg	5750 kg	*14300 kg	10950 kg		

PC210-10M0 Arm: 1840 mm Without bucket Shoe: 600 mm triple grouser

B \ A	MAX	⊛ MAX		7.5 m		6.0 m		4.5 m		3.0 m		1.5 m	
		Cf	Cs	Cf	Cs	Cf	Cs	Cf	Cs	Cf	Cs	Cf	Cs
7.5 m	4.71 m	*6850 kg	6550 kg					*6750 kg	*6750 kg				
6.0 m	6.09 m	*6300 kg	4300 kg			6500 kg	4400 kg	*6850 kg	*6850 kg				
4.5 m	6.88 m	5100 kg	3450 kg			6350 kg	4300 kg	*8200 kg	6650 kg				
3.0 m	7.29 m	4600 kg	3100 kg			6150 kg	4100 kg	9550 kg	6100 kg				
1.5 m	7.36 m	4400 kg	2950 kg			5950 kg	3900 kg	9150 kg	5750 kg				
0 m	7.13 m	4600 kg	3050 kg			5850 kg	3800 kg	9000 kg	5650 kg				
–1.5 m	6.55 m	5200 kg	3450 kg			5850 kg	3850 kg	9050 kg	5700 kg	*12900 kg	11000 kg		
–3.0 m	5.51 m	6800 kg	4450 kg					9250 kg	5850 kg	*12650 kg	11150 kg		

* Load is limited by hydraulic capacity rather than tipping. Ratings are based on ISO standard No.10567. Rated loads do not exceed 87% of hydraulic lift capacity or 75% of tipping load.

LIFTING CAPACITY WITH LIFTING MODE

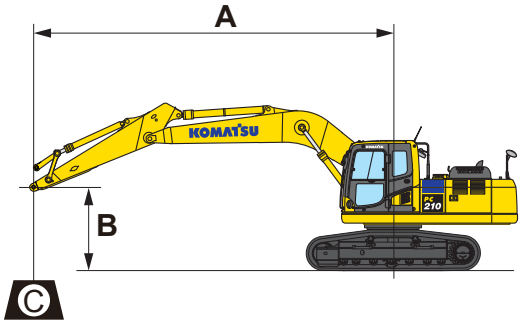

A: Reach from swing center
B: Arm top pin height
C: Lifting capacity
Cf: Rating over front
Cs: Rating over side
⊛: Rating at maximum reach

Conditions:
- 5700 mm one-piece boom
- Shoe width:
  - PC210-10M0 700 mm triple grouser

PC210-10M0	Arm: 2925 mm	Without bucket	Shoe: 700 mm triple grouser											
A / B	MAX	⊛ MAX		7.5 m		6.0 m		4.5 m		3.0 m		1.5 m	
		Cf	Cs	Cf	Cs	Cf	Cs	Cf	Cs	Cf	Cs	Cf	Cs
7.5 m	6.15 m	*3850 kg	*3850 kg			*4450 kg	*4450 kg						
6.0 m	7.26 m	*3600 kg	3300 kg			*5150 kg	4650 kg						
4.5 m	7.93 m	*3550 kg	2800 kg	4550 kg	3100 kg	*5750 kg	4450 kg	*6500 kg	*6500 kg				
3.0 m	8.29 m	*3700 kg	2550 kg	4450 kg	3000 kg	6300 kg	4200 kg	*8450 kg	6450 kg				
1.5 m	8.36 m	3650 kg	2450 kg	4300 kg	2850 kg	6050 kg	3950 kg	9400 kg	5900 kg				
0 m	8.15 m	3750 kg	2450 kg	4200 kg	2750 kg	5850 kg	3800 kg	9050 kg	5650 kg	*7000 kg	*7000 kg		
–1.5 m	7.65 m	4100 kg	2700 kg	4200 kg	2750 kg	5750 kg	3700 kg	8950 kg	5550 kg	*11450 kg	10550 kg	*7250 kg	*7250 kg
–3.0 m	6.78 m	4900 kg	3200 kg			5800 kg	3750 kg	9050 kg	5600 kg	*15200 kg	10750 kg	*11900 kg	*11900 kg
–4.5 m	5.37 m	*7000 kg	4550 kg					*8700 kg	5850 kg	*12200 kg	11100 kg		

PC210-10M0	Arm: 2410 mm	Without bucket	Shoe: 700 mm triple grouser										
A / B	MAX	⊛ MAX		7.5 m		6.0 m		4.5 m		3.0 m		1.5 m	
		Cf	Cs	Cf	Cs	Cf	Cs	Cf	Cs	Cf	Cs	Cf	Cs
7.5 m	5.49 m	*5900 kg	5350 kg										
6.0 m	6.71 m	*5500 kg	3800 kg			*5800 kg	4600 kg	*6050 kg	*6050 kg				
4.5 m	7.44 m	4650 kg	3150 kg			*6300 kg	4450 kg	*7400 kg	6900 kg	*10200 kg	*10200 kg		
3.0 m	7.81 m	4250 kg	2850 kg	4500 kg	3050 kg	6350 kg	4250 kg	*9300 kg	6400 kg				
1.5 m	7.88 m	4100 kg	2750 kg	4400 kg	2950 kg	6100 kg	4050 kg	9400 kg	5950 kg				
0 m	7.67 m	4200 kg	2800 kg	4350 kg	2900 kg	5950 kg	3900 kg	9200 kg	5750 kg				
–1.5 m	7.13 m	4650 kg	3100 kg			5900 kg	3850 kg	9150 kg	5750 kg	*12200 kg	10950 kg		
–3.0 m	6.19 m	5750 kg	3800 kg			6000 kg	3950 kg	9250 kg	5850 kg	*14300 kg	11150 kg		

PC210-10M0	Arm: 1840 mm	Without bucket	Shoe: 700 mm triple grouser										
A / B	MAX	⊛ MAX		7.5 m		6.0 m		4.5 m		3.0 m		1.5 m	
		Cf	Cs	Cf	Cs	Cf	Cs	Cf	Cs	Cf	Cs	Cf	Cs
7.5 m	4.71 m	*6850 kg	6650 kg					*6750 kg	*6750 kg				
6.0 m	6.09 m	*6300 kg	4350 kg			*6550 kg	4500 kg	*6850 kg	*6850 kg				
4.5 m	6.88 m	5200 kg	3500 kg			6450 kg	4400 kg	*8200 kg	6750 kg				
3.0 m	7.29 m	4650 kg	3150 kg			6250 kg	4150 kg	9700 kg	6200 kg				
1.5 m	7.36 m	4500 kg	3000 kg			6050 kg	4000 kg	9300 kg	5850 kg				
0 m	7.13 m	4650 kg	3100 kg			5950 kg	3900 kg	9200 kg	5750 kg				
–1.5 m	6.55 m	5300 kg	3500 kg			5950 kg	3900 kg	9200 kg	5800 kg	*12900 kg	11150 kg		
–3.0 m	5.51 m	6900 kg	4550 kg					9400 kg	5950 kg	*12650 kg	11350 kg		

* Load is limited by hydraulic capacity rather than tipping. Ratings are based on ISO standard No.10567. Rated loads do not exceed 87% of hydraulic lift capacity or 75% of tipping load.

LIFTING CAPACITY WITH LIFTING MODE

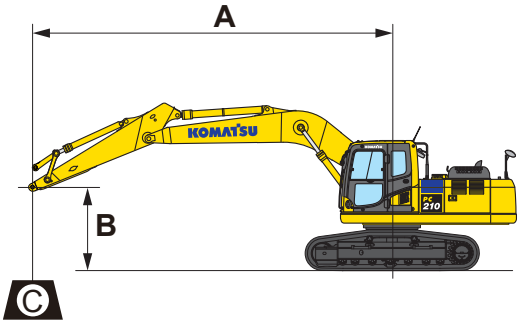

A: Reach from swing center
B: Arm top pin height
C: Lifting capacity
Cf: Rating over front
Cs: Rating over side
⊛: Rating at maximum reach

Conditions:
- 5700 mm one-piece boom
- Shoe width:
  —PC210-10M0 800 mm triple grouser

PC210-10M0	Arm: 2925 mm	Without bucket		Shoe: 800 mm triple grouser									
A / B	MAX	⊛ MAX		7.5 m		6.0 m		4.5 m		3.0 m		1.5 m	
		Cf	Cs	Cf	Cs	Cf	Cs	Cf	Cs	Cf	Cs	Cf	Cs
7.5 m	6.15 m	*3850 kg	*3850 kg			*4450 kg	*4450 kg						
6.0 m	7.26 m	*3600 kg	3350 kg			*5150 kg	4650 kg						
4.5 m	7.93 m	*3550 kg	2850 kg	4600 kg	3150 kg	*5750 kg	4500 kg	*6500 kg	*6500 kg				
3.0 m	8.29 m	*3700 kg	2550 kg	4500 kg	3000 kg	6350 kg	4250 kg	*8450 kg	6500 kg				
1.5 m	8.36 m	3700 kg	2450 kg	4350 kg	2900 kg	6100 kg	4000 kg	9500 kg	6000 kg				
0 m	8.15 m	3800 kg	2500 kg	4250 kg	2800 kg	5900 kg	3850 kg	9150 kg	5700 kg	*7000 kg	*7000 kg		
–1.5 m	7.65 m	4150 kg	2700 kg	4250 kg	2800 kg	5800 kg	3750 kg	9050 kg	5600 kg	*11450 kg	10650 kg	*7250 kg	*7250 kg
–3.0 m	6.78 m	4950 kg	3250 kg			5850 kg	3800 kg	9150 kg	5650 kg	*15200 kg	10850 kg	*11900 kg	*11900 kg
–4.5 m	5.37 m	*7000 kg	4600 kg					*8700 kg	5900 kg	*12200 kg	11250 kg		

PC210-10M0	Arm: 2410 mm	Without bucket		Shoe: 800 mm triple grouser									
A / B	MAX	⊛ MAX		7.5 m		6.0 m		4.5 m		3.0 m		1.5 m	
		Cf	Cs	Cf	Cs	Cf	Cs	Cf	Cs	Cf	Cs	Cf	Cs
7.5 m	5.49 m	*5900 kg	5400 kg										
6.0 m	6.71 m	*5500 kg	3850 kg			*5800 kg	4650 kg	*6050 kg	*6050 kg				
4.5 m	7.44 m	4700 kg	3200 kg			*6300 kg	4500 kg	*7400 kg	7000 kg	*10200 kg	*10200 kg		
3.0 m	7.81 m	4300 kg	2900 kg	4550 kg	3100 kg	6400 kg	4300 kg	*9300 kg	6450 kg				
1.5 m	7.88 m	4150 kg	2800 kg	4450 kg	3000 kg	6150 kg	4100 kg	9550 kg	6050 kg				
0 m	7.67 m	4250 kg	2850 kg	4400 kg	2900 kg	6000 kg	3950 kg	9300 kg	5850 kg				
–1.5 m	7.13 m	4700 kg	3150 kg			6000 kg	3900 kg	9250 kg	5800 kg	*12200 kg	11050 kg		
–3.0 m	6.19 m	5800 kg	3850 kg			6050 kg	4000 kg	9400 kg	5900 kg	*14300 kg	11250 kg		

PC210-10M0	Arm: 1840 mm	Without bucket		Shoe: 800 mm triple grouser									
A / B	MAX	⊛ MAX		7.5 m		6.0 m		4.5 m		3.0 m		1.5 m	
		Cf	Cs	Cf	Cs	Cf	Cs	Cf	Cs	Cf	Cs	Cf	Cs
7.5 m	4.71 m	*6850 kg	6750 kg					*6750 kg	*6750 kg				
6.0 m	6.09 m	*6300 kg	4400 kg			*6550 kg	4550 kg	*6850 kg	*6850 kg				
4.5 m	6.88 m	5250 kg	3550 kg			6550 kg	4400 kg	*8200 kg	6800 kg				
3.0 m	7.29 m	4700 kg	3150 kg			6300 kg	4200 kg	9800 kg	6250 kg				
1.5 m	7.36 m	4550 kg	3050 kg			6100 kg	4050 kg	9400 kg	5950 kg				
0 m	7.13 m	4750 kg	3150 kg			6000 kg	3950 kg	9300 kg	5850 kg				
–1.5 m	6.55 m	5350 kg	3550 kg			6000 kg	3950 kg	9300 kg	5850 kg	*12900 kg	11300 kg		
–3.0 m	5.51 m	7000 kg	4600 kg					9500 kg	6000 kg	*12650 kg	11450 kg		

* Load is limited by hydraulic capacity rather than tipping. Ratings are based on ISO standard No.10567. Rated loads do not exceed 87% of hydraulic lift capacity or 75% of tipping load.

LIFTING CAPACITY WITH LIFTING MODE

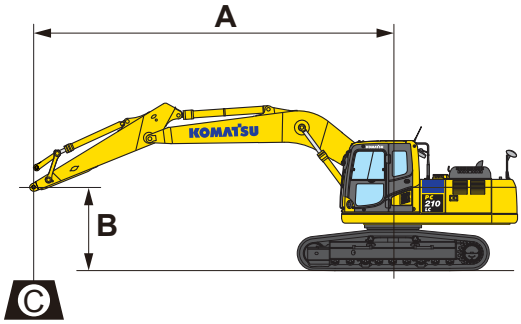

A: Reach from swing center
B: Arm top pin height
C: Lifting capacity
Cf: Rating over front
Cs: Rating over side
⊛: Rating at maximum reach

Conditions:
- 5700 mm one-piece boom
- Shoe width:
  - PC210LC-10M0 600 mm triple grouser

PC210LC-10M0	Arm: 2925 mm	Without bucket	Shoe: 600 mm triple grouser											
A / B	MAX	⊛ MAX		7.5 m		6.0 m		4.5 m		3.0 m		1.5 m	
		Cf	Cs	Cf	Cs	Cf	Cs	Cf	Cs	Cf	Cs	Cf	Cs
7.5 m	6.15 m	*3850 kg	*3850 kg			*4450 kg	*4450 kg						
6.0 m	7.26 m	*3600 kg	*3600 kg			*5150 kg	5100 kg						
4.5 m	7.93 m	*3550 kg	3100 kg	5300 kg	3400 kg	*5750 kg	4900 kg	*6500 kg	*6500 kg				
3.0 m	8.29 m	*3700 kg	2800 kg	5200 kg	3300 kg	*6600 kg	4650 kg	*8450 kg	7150 kg				
1.5 m	8.36 m	*3950 kg	2700 kg	5050 kg	3200 kg	7100 kg	4400 kg	*10250 kg	6600 kg				
0 m	8.15 m	4400 kg	2750 kg	4950 kg	3100 kg	6900 kg	4200 kg	10950 kg	6300 kg	*7000 kg	*7000 kg		
–1.5 m	7.65 m	4800 kg	3000 kg	4950 kg	3050 kg	6800 kg	4150 kg	10850 kg	6250 kg	*11450 kg	*11450 kg	*7250 kg	*7250 kg
–3.0 m	6.78 m	5750 kg	3550 kg			6850 kg	4200 kg	*10700 kg	6300 kg	*15200 kg	12300 kg	*11900 kg	*11900 kg
–4.5 m	5.37 m	*7000 kg	5100 kg					*8700 kg	6550 kg	*12200 kg	*12200 kg		

PC210LC-10M0	Arm: 2410 mm	Without bucket	Shoe: 600 mm triple grouser										
A / B	MAX	⊛ MAX		7.5 m		6.0 m		4.5 m		3.0 m		1.5 m	
		Cf	Cs	Cf	Cs	Cf	Cs	Cf	Cs	Cf	Cs	Cf	Cs
7.5 m	5.49 m	*5900 kg	5850 kg										
6.0 m	6.71 m	*5500 kg	4200 kg			*5800 kg	5050 kg	*6050 kg	*6050 kg				
4.5 m	7.44 m	5400 kg	3500 kg			*6300 kg	4900 kg	*7400 kg	*7400 kg	*10200 kg	*10200 kg		
3.0 m	7.81 m	4900 kg	3150 kg	5250 kg	3350 kg	*7150 kg	4700 kg	*9300 kg	7100 kg				
1.5 m	7.88 m	4800 kg	3050 kg	5150 kg	3250 kg	7200 kg	4450 kg	*10900 kg	6650 kg				
0 m	7.67 m	4900 kg	3100 kg	5050 kg	3200 kg	7000 kg	4350 kg	11100 kg	6450 kg				
–1.5 m	7.13 m	5450 kg	3450 kg			7000 kg	4300 kg	11050 kg	6450 kg	*12200 kg	*12200 kg		
–3.0 m	6.19 m	6750 kg	4200 kg			7050 kg	4350 kg	*10400 kg	6550 kg	*14300 kg	12700 kg		

PC210LC-10M0	Arm: 1840 mm	Without bucket	Shoe: 600 mm triple grouser										
A / B	MAX	⊛ MAX		7.5 m		6.0 m		4.5 m		3.0 m		1.5 m	
		Cf	Cs	Cf	Cs	Cf	Cs	Cf	Cs	Cf	Cs	Cf	Cs
7.5 m	4.71 m	*6850 kg	*6850 kg					*6750 kg	*6750 kg				
6.0 m	6.09 m	*6300 kg	4800 kg			*6550 kg	4950 kg	*6850 kg	*6850 kg				
4.5 m	6.88 m	6050 kg	3900 kg			*6850 kg	4800 kg	*8200 kg	7450 kg				
3.0 m	7.29 m	5450 kg	3450 kg			7350 kg	4600 kg	*10100 kg	6900 kg				
1.5 m	7.36 m	5250 kg	3350 kg			7150 kg	4450 kg	11200 kg	6550 kg				
0 m	7.13 m	5450 kg	3450 kg			7000 kg	4350 kg	11100 kg	6450 kg				
–1.5 m	6.55 m	6200 kg	3900 kg			7000 kg	4350 kg	*11100 kg	6500 kg	*12900 kg	12750 kg		
–3.0 m	5.51 m	*7600 kg	5000 kg					*9600 kg	6650 kg	*12650 kg	*12650 kg		

* Load is limited by hydraulic capacity rather than tipping. Ratings are based on ISO standard No.10567. Rated loads do not exceed 87% of hydraulic lift capacity or 75% of tipping load.

LIFTING CAPACITY WITH LIFTING MODE

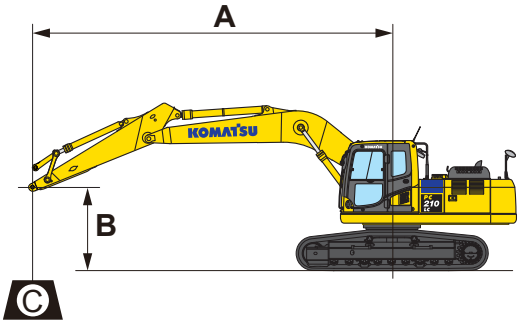

A: Reach from swing center
B: Arm top pin height
C: Lifting capacity
Cf: Rating over front
Cs: Rating over side
⊛: Rating at maximum reach

Conditions:
- 5700 mm one-piece boom
- Shoe width:
  —PC210LC-10M0 700 mm triple grouser

PC210LC-10M0	Arm: 2925 mm	Without bucket		Shoe: 700 mm triple grouser									
A / B	MAX	⊛ MAX		7.5 m		6.0 m		4.5 m		3.0 m		1.5 m	
		Cf	Cs	Cf	Cs	Cf	Cs	Cf	Cs	Cf	Cs	Cf	Cs
7.5 m	6.15 m	*3850 kg	*3850 kg			*4450 kg	*4450 kg						
6.0 m	7.26 m	*3600 kg	*3600 kg			*5150 kg	*5150 kg						
4.5 m	7.93 m	*3550 kg	3150 kg	*5400 kg	3450 kg	*5750 kg	5000 kg	*6500 kg	*6500 kg				
3.0 m	8.29 m	*3700 kg	2850 kg	5300 kg	3350 kg	*6600 kg	4750 kg	*8450 kg	7250 kg				
1.5 m	8.36 m	*3950 kg	2750 kg	5150 kg	3250 kg	7250 kg	4500 kg	*10250 kg	6750 kg				
0 m	8.15 m	*4450 kg	2800 kg	5050 kg	3150 kg	7050 kg	4300 kg	11200 kg	6450 kg	*7000 kg	*7000 kg		
–1.5 m	7.65 m	4900 kg	3050 kg	5050 kg	3100 kg	6950 kg	4200 kg	11100 kg	6350 kg	*11450 kg	*11450 kg	*7250 kg	*7250 kg
–3.0 m	6.78 m	5900 kg	3650 kg			7000 kg	4250 kg	*10700 kg	6400 kg	*15200 kg	12500 kg	*11900 kg	*11900 kg
–4.5 m	5.37 m	*7000 kg	5200 kg					*8700 kg	6650 kg	*12200 kg	*12200 kg		

PC210LC-10M0	Arm: 2410 mm	Without bucket		Shoe: 700 mm triple grouser									
A / B	MAX	⊛ MAX		7.5 m		6.0 m		4.5 m		3.0 m		1.5 m	
		Cf	Cs	Cf	Cs	Cf	Cs	Cf	Cs	Cf	Cs	Cf	Cs
7.5 m	5.49 m	*5900 kg	*5900 kg										
6.0 m	6.71 m	*5500 kg	4250 kg			*5800 kg	5150 kg	*6050 kg	*6050 kg				
4.5 m	7.44 m	*5450 kg	3550 kg			*6300 kg	5000 kg	*7400 kg	*7400 kg	*10200 kg	*10200 kg		
3.0 m	7.81 m	5000 kg	3200 kg	5350 kg	3450 kg	*7150 kg	4750 kg	*9300 kg	7200 kg				
1.5 m	7.88 m	4850 kg	3100 kg	5250 kg	3350 kg	7300 kg	4550 kg	*10900 kg	6800 kg				
0 m	7.67 m	5000 kg	3150 kg	5200 kg	3250 kg	7150 kg	4400 kg	11300 kg	6600 kg				
–1.5 m	7.13 m	5550 kg	3500 kg			7100 kg	4400 kg	11300 kg	6550 kg	*12200 kg	*12200 kg		
–3.0 m	6.19 m	6900 kg	4300 kg			7200 kg	4450 kg	*10400 kg	6650 kg	*14300 kg	12950 kg		

PC210LC-10M0	Arm: 1840 mm	Without bucket		Shoe: 700 mm triple grouser									
A / B	MAX	⊛ MAX		7.5 m		6.0 m		4.5 m		3.0 m		1.5 m	
		Cf	Cs	Cf	Cs	Cf	Cs	Cf	Cs	Cf	Cs	Cf	Cs
7.5 m	4.71 m	*6850 kg	*6850 kg					*6750 kg	*6750 kg				
6.0 m	6.09 m	*6300 kg	4900 kg			*6550 kg	5000 kg	*6850 kg	*6850 kg				
4.5 m	6.88 m	6150 kg	3950 kg			*6850 kg	4900 kg	*8200 kg	7550 kg				
3.0 m	7.29 m	5550 kg	3550 kg			7500 kg	4700 kg	*10100 kg	7050 kg				
1.5 m	7.36 m	5350 kg	3400 kg			7250 kg	4500 kg	*11400 kg	6650 kg				
0 m	7.13 m	5600 kg	3500 kg			7150 kg	4400 kg	11300 kg	6550 kg				
–1.5 m	6.55 m	6300 kg	3950 kg			7150 kg	4400 kg	*11100 kg	6600 kg	*12900 kg	*12900 kg		
–3.0 m	5.51 m	*7600 kg	5100 kg					*9600 kg	6750 kg	*12650 kg	*12650 kg		

* Load is limited by hydraulic capacity rather than tipping. Ratings are based on ISO standard No.10567. Rated loads do not exceed 87% of hydraulic lift capacity or 75% of tipping load.

LIFTING CAPACITY WITH LIFTING MODE

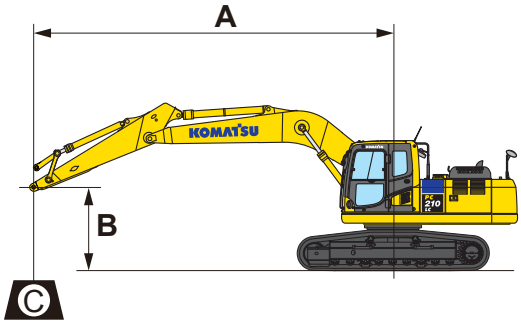

A: Reach from swing center
B: Arm top pin height
C: Lifting capacity
Cf: Rating over front
Cs: Rating over side
⊛: Rating at maximum reach

Conditions:
- 5700 mm one-piece boom
- Shoe width:
  - PC210LC-10M0 800 mm triple grouser

PC210LC-10M0	Arm: 2925 mm	Without bucket	Shoe: 800 mm triple grouser											
A / B	MAX	⊛ MAX		7.5 m		6.0 m		4.5 m		3.0 m		1.5 m	
		Cf	Cs	Cf	Cs	Cf	Cs	Cf	Cs	Cf	Cs	Cf	Cs
7.5 m	6.15 m	*3850 kg	*3850 kg			*4450 kg	*4450 kg						
6.0 m	7.26 m	*3600 kg	*3600 kg			*5150 kg	*5150 kg						
4.5 m	7.93 m	*3550 kg	3200 kg	*5400 kg	3500 kg	*5750 kg	5050 kg	*6500 kg	*6500 kg				
3.0 m	8.29 m	*3700 kg	2900 kg	5350 kg	3400 kg	*6600 kg	4800 kg	*8450 kg	7350 kg				
1.5 m	8.36 m	*3950 kg	2800 kg	5250 kg	3300 kg	7350 kg	4550 kg	*10250 kg	6800 kg				
0 m	8.15 m	*4450 kg	2850 kg	5150 kg	3200 kg	7150 kg	4350 kg	*11250 kg	6500 kg	*7000 kg	*7000 kg		
–1.5 m	7.65 m	4950 kg	3100 kg	5100 kg	3150 kg	7050 kg	4300 kg	11200 kg	6450 kg	*11450 kg	*11450 kg	*7250 kg	*7250 kg
–3.0 m	6.78 m	5950 kg	3700 kg			7100 kg	4300 kg	*10700 kg	6500 kg	*15200 kg	12650 kg	*11900 kg	*11900 kg
–4.5 m	5.37 m	*7000 kg	5250 kg					*8700 kg	6750 kg	*12200 kg	*12200 kg		

PC210LC-10M0	Arm: 2410 mm	Without bucket	Shoe: 800 mm triple grouser											
A / B	MAX	⊛ MAX		7.5 m		6.0 m		4.5 m		3.0 m		1.5 m	
		Cf	Cs	Cf	Cs	Cf	Cs	Cf	Cs	Cf	Cs	Cf	Cs
7.5 m	5.49 m	*5900 kg	*5900 kg										
6.0 m	6.71 m	*5500 kg	4300 kg			*5800 kg	5200 kg	*6050 kg	*6050 kg				
4.5 m	7.44 m	*5450 kg	3600 kg			*6300 kg	5050 kg	*7400 kg	*7400 kg	*10200 kg	*10200 kg		
3.0 m	7.81 m	5100 kg	3250 kg	5400 kg	3450 kg	*7150 kg	4850 kg	*9300 kg	7300 kg				
1.5 m	7.88 m	4950 kg	3150 kg	5300 kg	3350 kg	7400 kg	4600 kg	*10900 kg	6850 kg				
0 m	7.67 m	5100 kg	3200 kg	5250 kg	3300 kg	7250 kg	4450 kg	11450 kg	6650 kg				
–1.5 m	7.13 m	5650 kg	3550 kg			7200 kg	4450 kg	*11400 kg	6650 kg	*12200 kg	*12200 kg		
–3.0 m	6.19 m	7000 kg	4350 kg			7300 kg	4500 kg	*10400 kg	6750 kg	*14300 kg	13100 kg		

PC210LC-10M0	Arm: 1840 mm	Without bucket	Shoe: 800 mm triple grouser											
A / B	MAX	⊛ MAX		7.5 m		6.0 m		4.5 m		3.0 m		1.5 m	
		Cf	Cs	Cf	Cs	Cf	Cs	Cf	Cs	Cf	Cs	Cf	Cs
7.5 m	4.71 m	*6850 kg	*6850 kg					*6750 kg	*6750 kg				
6.0 m	6.09 m	*6300 kg	4950 kg			*6550 kg	5050 kg	*6850 kg	*6850 kg				
4.5 m	6.88 m	*6200 kg	4000 kg			*6850 kg	4950 kg	*8200 kg	7650 kg				
3.0 m	7.29 m	5600 kg	3600 kg			7550 kg	4750 kg	*10100 kg	7100 kg				
1.5 m	7.36 m	5450 kg	3450 kg			7350 kg	4550 kg	*11400 kg	6750 kg				
0 m	7.13 m	5650 kg	3550 kg			7250 kg	4450 kg	11450 kg	6650 kg				
–1.5 m	6.55 m	6400 kg	4000 kg			7250 kg	4450 kg	*11100 kg	6700 kg	*12900 kg	*12900 kg		
–3.0 m	5.51 m	*7600 kg	5200 kg					*9600 kg	6850 kg	*12650 kg	*12650 kg		

* Load is limited by hydraulic capacity rather than tipping. Ratings are based on ISO standard No.10567. Rated loads do not exceed 87% of hydraulic lift capacity or 75% of tipping load.

Major Component Weights

Items				Weight for a Machine (kg)	
				STD Undercarriage	LC Undercarriage
Boom (Incl. Piping, Pins, Arm Cylinder)	**5.7 m**	**Type A***	**Without ATT Piping**	1870	
			With1ATT Piping	1920	
		Type B**	**Without ATT Piping**	1910	
			With1ATT Piping	1970	
Arm (Incl. Piping, Pins, Bucket Cylinder)	**2.9 m**	**Without ATT Piping**		1100	
		With 1ATT Piping		1155	
	2.4 m	**Without ATT Piping**		1010	
		With 1ATT Piping		1070	
	1.8 m	**Without ATT Piping**		950	
		With 1ATT Piping		1010	
Bucket (Without Linkage)	**0.80 m³ GP**			680	
	0.94 m³ GP			740	
	1.00 m³ HD			880	
	1.20 m³ GP			910	
Roller Guards	**STD**			45	85
	Full Length			220	265
Shoe Assembly (With Link)	**600 mm**			2430	-
	700 mm			2810	3060
	800 mm			3060	3340

*: for Asia, C.S. America **: for Middle East, Africa note: Area may vary

Standard Specification:

Operating weight: PC210-10M0: 20500 kg
PC210LC-10M0: 21700 kg
Operating weight including below spec.
Boom: 5700 mm STD
Arm: 2925 mm STD
Bucket: 1.00 m³ HD
Shoe: 600 mm triple grouser
700 mm triple grouser (LC)
Counter weight: STD
Track roller guard: STD
Rated capacity of lubricants, coolant, full fuel tank, 80 kg operator.

STANDARD EQUIPMENT

ENGINE
- Air pre-cleaner
- Automatic engine warm-up system
- Compliant Bio diesel fuel
- Coolant filter
- Dry type air cleaner, double element
- Engine, Komatsu SAA6D107E-1
- Engine overheat prevention system
- Fan clutch
- Radiator and oil cooler dust proof net

ELECTRICAL SYSTEM
- Alternator, 24 V/60 A, brushless
- Auto-decelerator
- Batteries, 2 X 12 V/110 Ah
- Battery disconnect switch with operation lamp
- Starting motor, 24 V/4.5 kW
- Working light, 2 (Boom and R.H.)

HYDRAULIC SYSTEM
- Boom holding valve
- Clogging sensor for hydraulic oil return filter
- Power maximizing system
- Pressure Proportional Control (PPC) hydraulic control system
- Working mode selection system

GUARDS AND COVERS
- Fan guard structure

UNDERCARRIAGE
- Hydraulic track adjusters (Each side)
- Track guiding guard, center section
- Track roller
  - —PC210-10M0: 7 each side
  - —PC210LC-10M0: 9 each side
- Track shoe
  - —PC210-10M0: 600 mm triple grouser
  - —PC210LC-10M0: 700 mm triple grouser

OPERATOR ENVIRONMENT
- 12 V power supply
- Auto A/C with defroster
- AUX equipped with radio
- Equipment Management Monitoring System
- Large multi-lingual high resolution LCD monitor
- Rear view mirrors (R.H., L.H., rear, sidewise)
- ROPS cab (ISO 12117-2)
- Suspension seat

OTHER EQUIPMENT
- Blow-by sensor
- Counterweight
- Electric horn
- KOMTRAX (Only for approved area)
- Rear reflector
- Slip-resistant plates
- Travel alarm

OPTIONAL EQUIPMENT

ENGINE
- Additional filter system for poor-quality fuel (Water separator)
- Large capacity fuel pre-filter

ELECTRICAL SYSTEM
- Amber beacon lamp on cab roof
- Batteries, large capacity
- Working lights
  - —2 on cab
  - —1 on counterweight

HYDRAULIC SYSTEM
- Arm holding valve
- Clogging sensor for breaker return filter
- Inline filter
- Long lubricating intervals for work equipment bushing (500 hours)
- Service valve

GUARDS AND COVERS
- Heavy duty revolving frame undercover
- Revolving frame deck guard

UNDERCARRIAGE
- Shoes, triple grouser shoes
  - —PC210-10M0: 700 mm, 800 mm
  - —PC210LC-10M0: 600 mm, 800 mm, 900 mm
- Track frame undercover
- Track roller guards (Full length)

OPERATOR ENVIRONMENT
- Bolt-on top guard, OPG top guard level 2 (ISO 10262)
- Cab accessories
  - —Rain visor
  - —Sun roller blind
  - —Sun visor
- Cab front guard
  - —Full height guard
  - —Half height guard
- Rear view monitor system

WORK EQUIPMENT
- Arms
  - —1840 mm arm assembly
  - —2410 mm arm assembly

SERVICING EQUIPMENT
- Electric priming pump
- Fuel refill pump
- Oil sampling port (Engine & hydraulic)
- Preventive Maintenance (PM) service connector

Standard/option equipment may change. For more details, please consult your distributer.

PC210/210LC-10M0

https://home.komatsu/en

Printed in Japan 201901 IP.As

KOMATSU®

CEN00820-01

Materials and specifications are subject to change without notice.
KOMATSU® is a trademark of Komatsu Ltd. Japan.